Solutions That Set New Standards

CALDWELL
Since 1888

EZ-LIFT INSTALLATION PROCEDURES

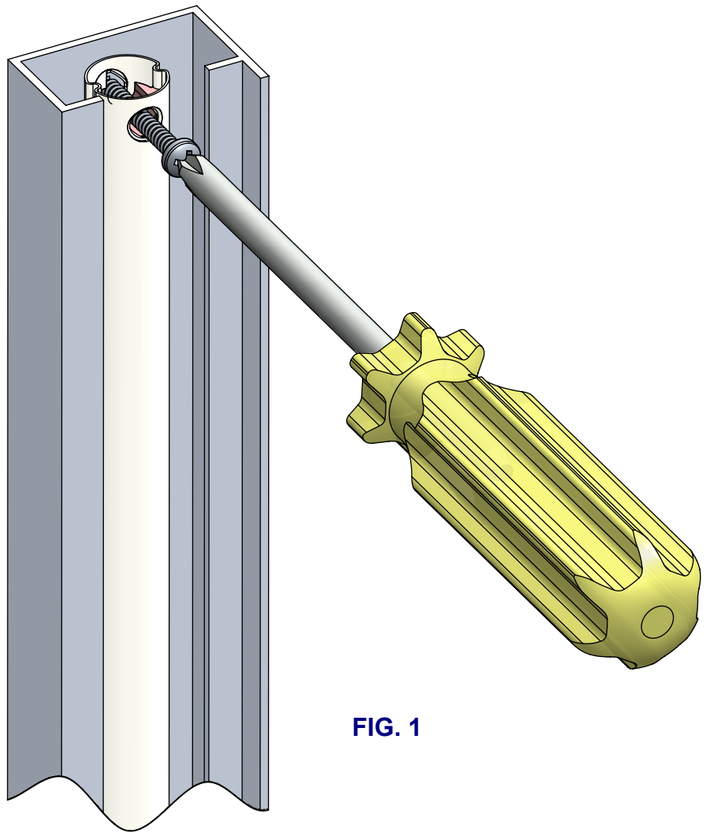

FIG. 1

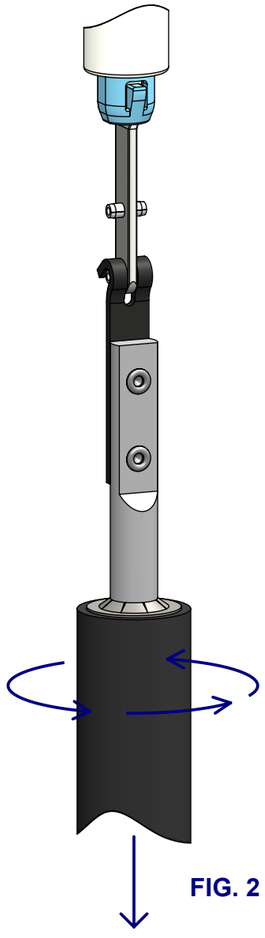

FIG. 2

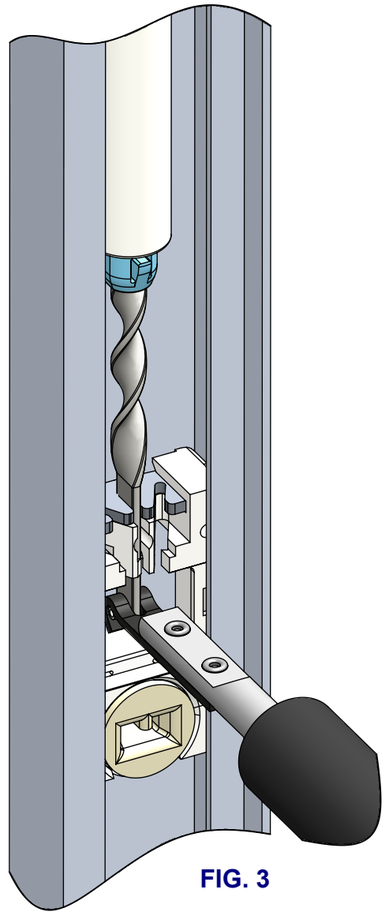

FIG. 3

INSTALLATION PROCEDURES:

1. INSERT PIVOT SHOE INTO JAMB POCKET AND LOCK INTO POSITION TO ACCEPT ENGAGEMENT OF PIVOT BARS WHEN SASH IS INSTALLED INTO FRAME.
2. ATTACH THE BALANCE TO THE WINDOW FRAME USING A #8 SCREW (SEE FIG. 1).
3. ENGAGE TENSIONING TOOL WITH LOWER ROLL PIN ON BALANCE ROD AND DISENGAGE ROD FROM PRETENSION ANCHOR BY SIMULTANIOUSLY PULLING AND ROTATING TENSIONING TOOL CLOCKWISE (WHEN VIEWED FROM BELOW). BE CAREFUL NOT TO LOOSE PRETENSION TURNS (SEE FIG. 2).
4. EXTEND ROD AND INSERT THE BALANCE ROD INTO THE PIVOT LOCK SHOE.

CAUTION:

1. AFTER ROD DISENGAGEMENT (INSTALLATION PROCEDURE STEP 3), TOOL WILL WANT TO ROTATE IN A COUNTER CLOCKWISE DIRECTION (WHEN VIEWED FROM BELOW). DO NOT ALLOW TURNS TO BE LOST.
2. MAKE SURE NOT TO BEND SPIRAL ROD DURING INSTALLATION.
3. BE SURE THAT SPIRAL ROD IS PROPERLY SEATED IN PIVOT LOCK SHOE (SEE FIG. 3).